CS 598CM: ML for Compilers and Architecture

Instructor: Charith Mendis

ILLINOIS

Brief Announcements

- **Paper Selections:** Due on today, presentations start Sept 14th
- **Paper Reviews:** see the website for instructions; first due on Sept 12th
- **Resources and tutorials**
- **Piazza:** (optional) on-line discussions of papers
- **COVID19:** If you feel sick, please stay at home and you can join the class virtually using Zoom

Paper Reviews

- Submit a 250-750 word summary of the paper including
  - Problem definition
  - Key contributions and solution overview
  - Evaluation summary
  - Strengths and weaknesses (limitations) of the technique(s)
- Let me know how you would extend the paper in 1-2 sentences (Can be vague and creative) => May be project ideas :)

Paper Presentation

- Presentations start on September 14th; assignments would be available on September 8th

- Week before: Meet instructor in person or virtually to discuss the presentation plan (compulsory!)
  - Use this time to ask questions and discuss the outline
  - Presentation slides are due when reviews are due for that class
  - Submit the final slides using the form on website
  - You can use office hours for this or schedule a meeting with me

- During the class: Be present in class either in person or virtually (compulsory!)
  - Deliver a 20-30 min presentation on the paper
  - Answer questions for the following 15 min
  - Final 30 min for open discussion on the paper (lead by the instructor)

Paper Presentation

- After class: Summarize the discussion of the paper within 250 - 750 words
  - Submit the summary within 2 days at the end of the class
  - Update the same form to submit the summary (edit the same entry)

- The presentation should include
  - Problem definition
  - Motivation: Why is this an important problem?
  - Outline the high-level solution
  - Illustrate the solution
  - Evaluation: What worked and what didn't
  - Related Work: Put the solution in context of other research
  - Strengths and weaknesses
  - How would you extend this work?

Paper Presentation

- September 14th and 16th presentations
  - 15-30min presentation
  - Meet the instructor on September 9th to discuss the plan; email me to setup a time to meet in person or virtually

Introductions!

- Let’s get to know each other
- No specific format
  - Name
  - Department
  - Advisor
  - Research Project (if any)
- Please drop by during office hours if you want to discuss exciting class projects! Potentially leading to publication!

Recap

- Domain Specific Languages and Optimizations
  - XLA - Operator Fusion, Graph Rewrites
  - Graph Processing
- ML in Architecture
  - Branch Prediction

Lecture 5:
Machine Learning Techniques

Types of Learning

- Supervised Learning (labelled data)
- Unsupervised Learning
- Semi-supervised Learning
- Reinforcement Learning

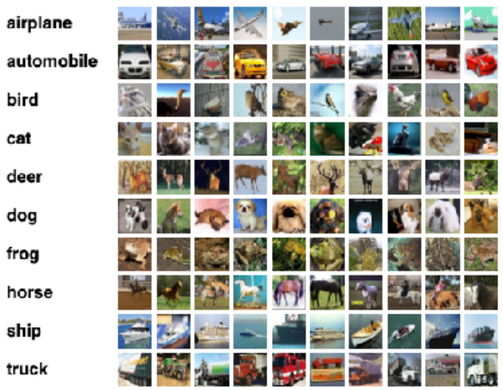

Image Classification

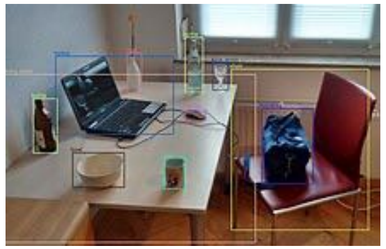

Object Detection

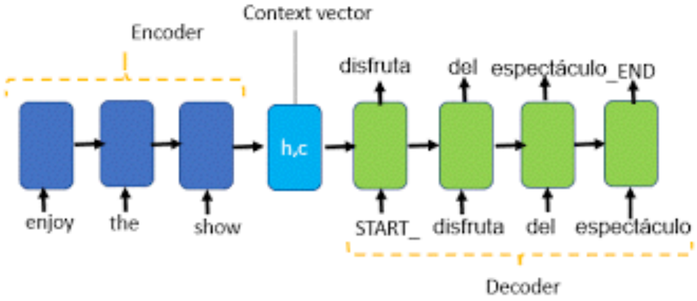

Machine Translation

Types of Learning

- Supervised Learning
- Unsupervised Learning (unlabelled data)
- Semi-supervised Learning
- Reinforcement Learning

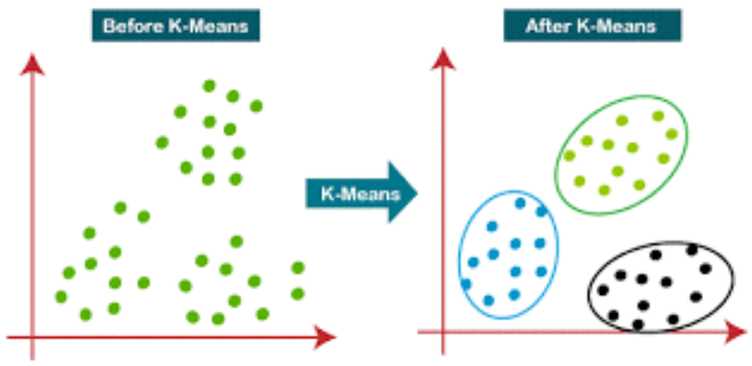

K-means clustering

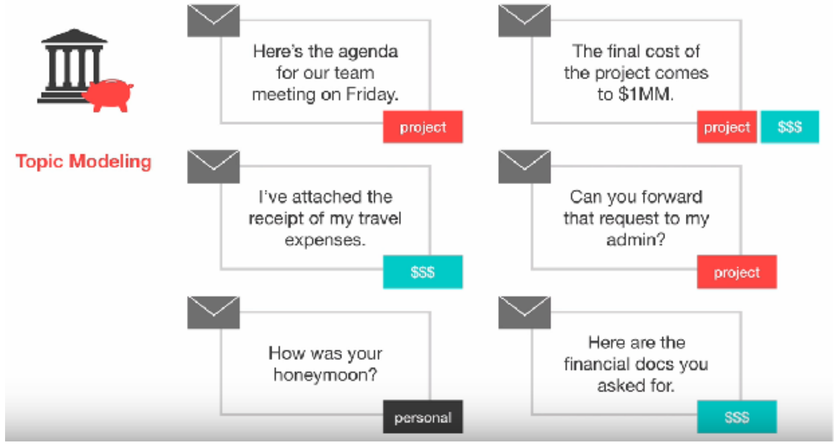

Topic Modeling

Types of Learning

- Supervised Learning
- Unsupervised Learning
- Semi-supervised Learning
- Reinforcement Learning

Learning using a small number of labelled data and a large number of unlabelled data

Community Detection **Node classification**

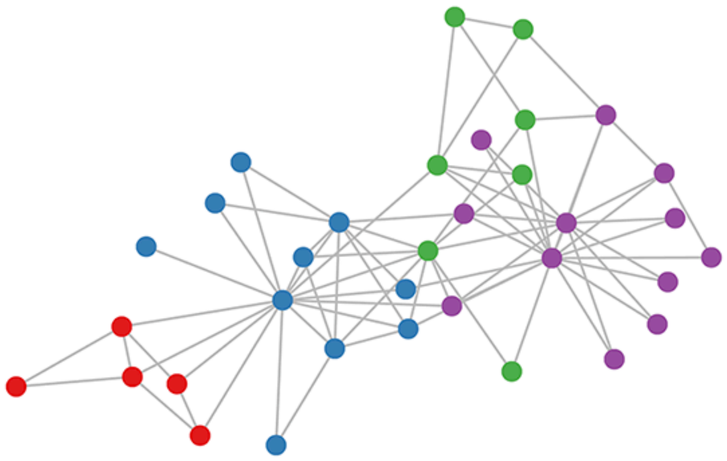

Karate club graph, colors denote communities obtained via modularity-based clustering (Brandes et al., 2008).

Types of Learning

- Supervised Learning
- Unsupervised Learning
- Semi-supervised Learning
- Reinforcement Learning

No labelled data; learn from experience

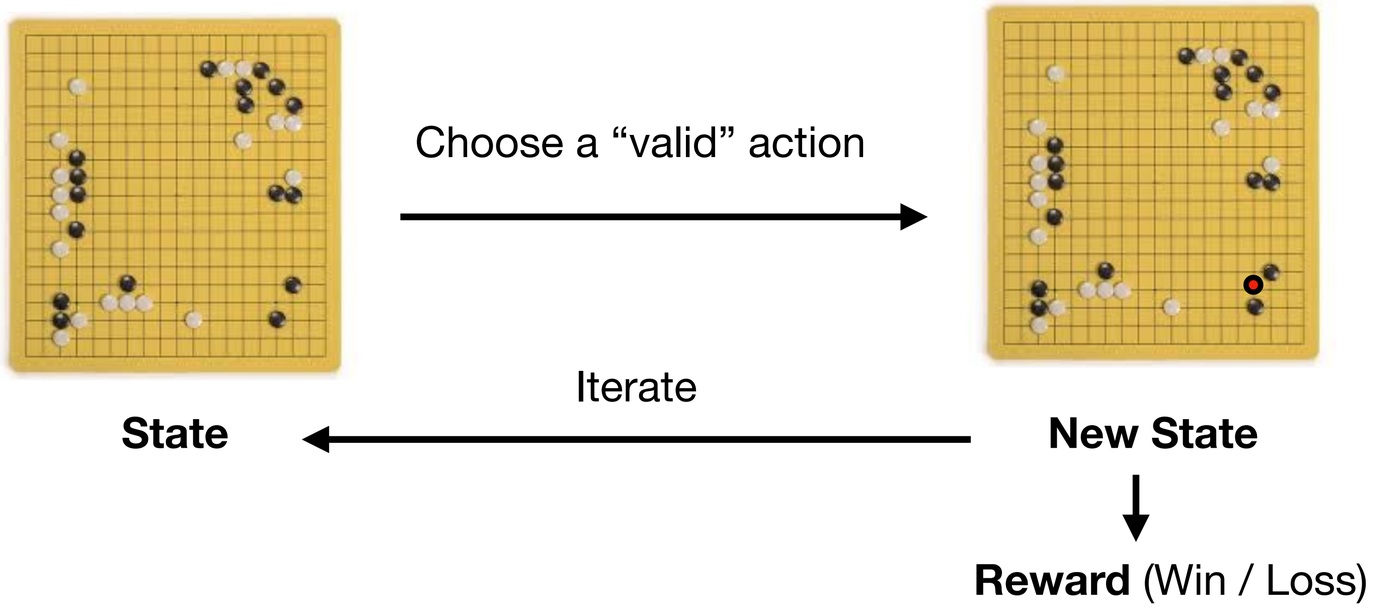

Examples from Systems

- Supervised Learning - Performance models, Code completion tasks, etc.
- Unsupervised Learning - Large code models (Github Co-pilot)
- Semi-supervised Learning
- Reinforcement Learning - Code Optimization, Design Space Exploration

Machine Learning Simplified!

Data → **Model** → **Prediction**

- Images
- Program Code
- Sentences
- Robot State

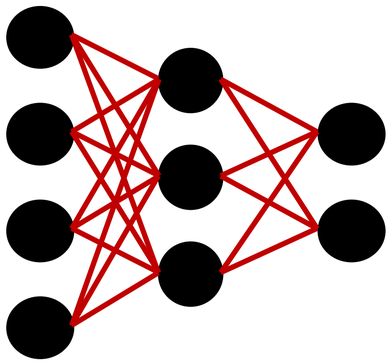

- Label
- Performance
- Translation
- Action

Possibly a Neural Network
(A non-linear function with tunable parameters)

Perceptrons

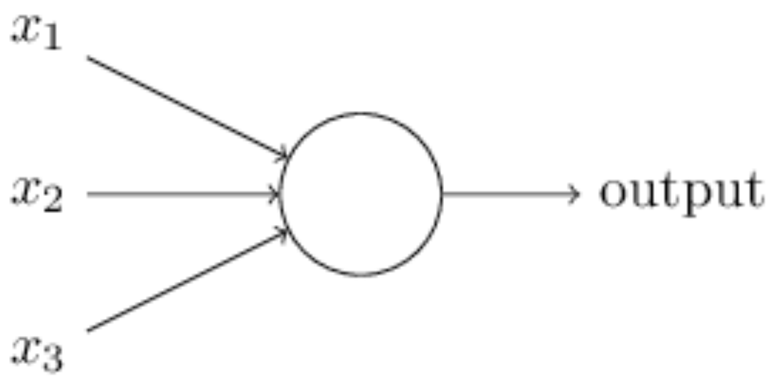

$$\text{output} = \begin{cases} 0 & \text{if } \sum_j w_j x_j \leq \text{ threshold} \\ 1 & \text{if } \sum_j w_j x_j > \text{ threshold} \end{cases}$$

x_i - binary input / real input
w_i - real weights
Output - binary output

Where's the non-linearity?

Can only separate linearly separable regions

Michael Nielsen, "Neural Networks and Deep Learning", Determination Press 2015

Add more layers and perceptrons?

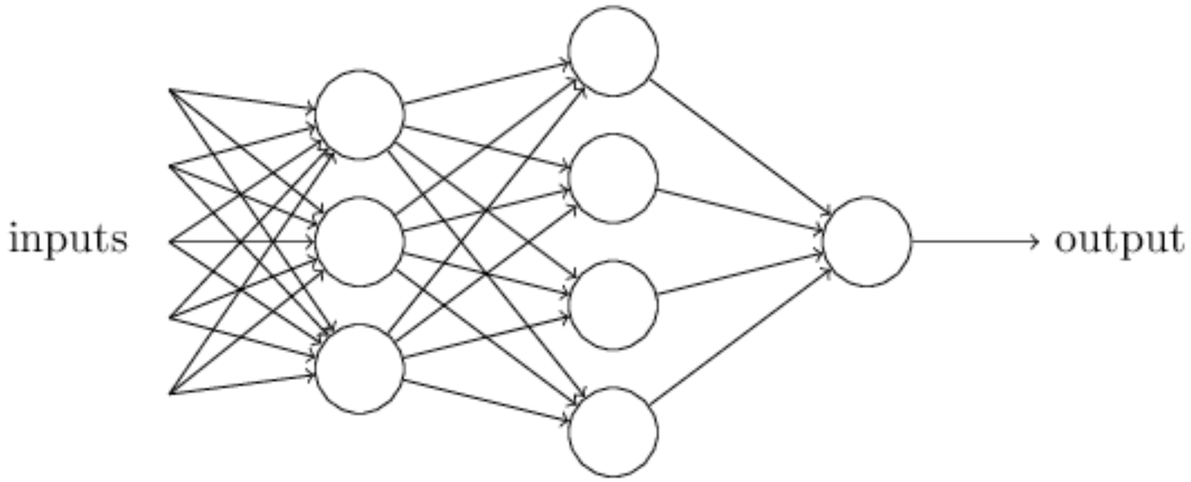

Layer 1 **Layer 2** **Layer 3**

Is it more powerful than a single perceptron?

Now it is non-linear; yes

Each layer makes decisions about high-level concepts

How do we set the weights?

Let's devise an algorithm to learn them

Michael Nielsen, "Neural Networks and Deep Learning", Determination Press 2015

Smooth Neurons

Instead of step function

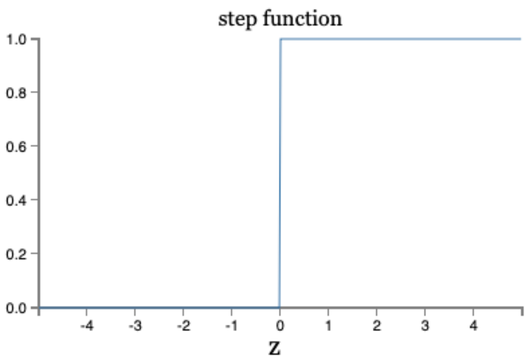

Sigmoid Activations

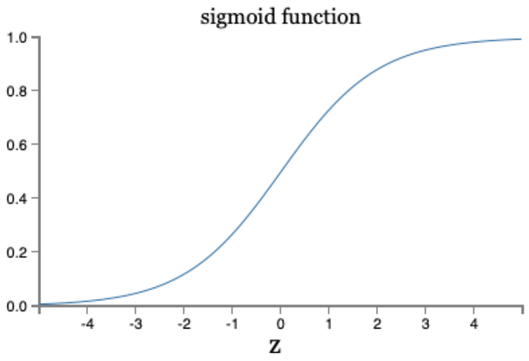

Rectified Linear Unit Activations

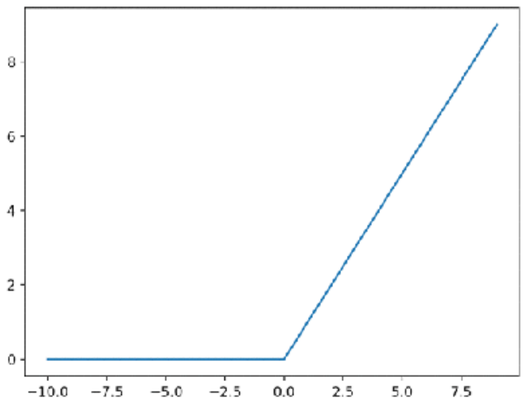

Learning

- The process of learning weights of each neuron connection

- Use gradient descent since NNs are differentiable

$$W_{i+1} = W_i - \eta \bigtriangledown F(W_i)$$

η – Learning Rate

$F(.)$ – Neural Network Function

- Use better variants with better convergence properties (e.g. Stochastic Gradient Descent, ADAM)

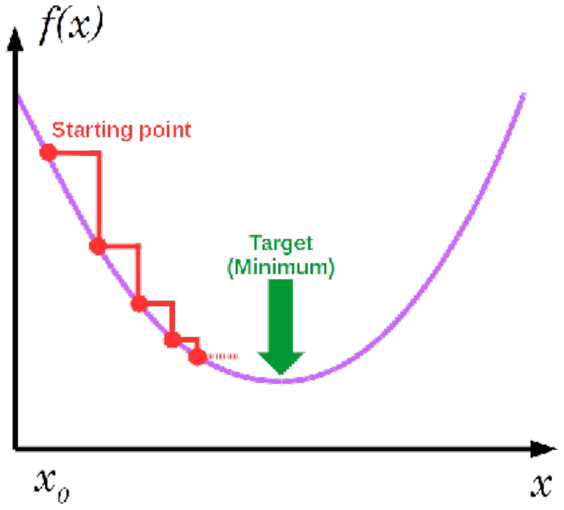

https://lucidar.me/en/neural-networks/single-layer-gradient-descent/

Multilayer perceptrons

- Same as Feedforward fully connected neural networks
- Uses smooth activations to build a multilayer connection of neurons

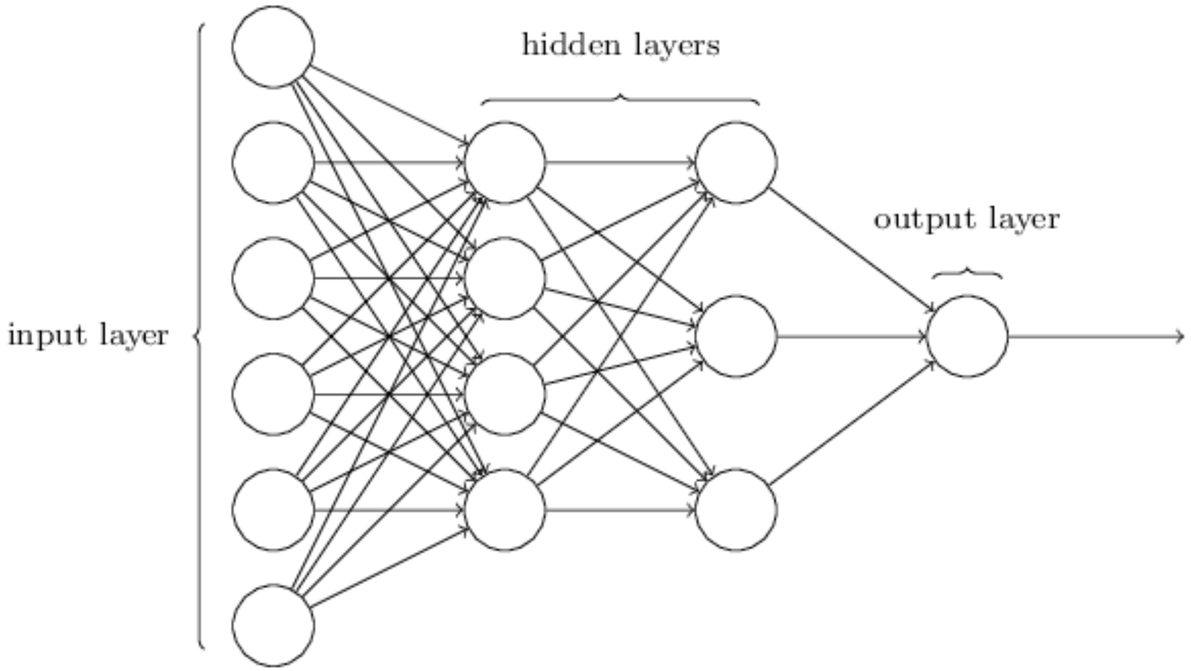

How powerful are NNs?

- Neural Networks are function approximations (differentiable)
- Do you need plenty of hidden layers to achieve more capacity?
  - **Theoretically No**: Universal Approximation Theorem
  - Informally, it says one hidden layer is sufficient to approximate any continuous function
  - It does not say about **learnability** (how to set the weights)
- **In practice**, different network topologies with deeper networks are needed to learn better approximations for problems at hand

Quick Overview of Different NN topologies

Convolutional Neural Networks

- Used in the image domain and mimics convolution filters on parts of the image
- Learnable parameters are weights of these convolution filters
- Usually have multiple convolutional layers and max pooling in between

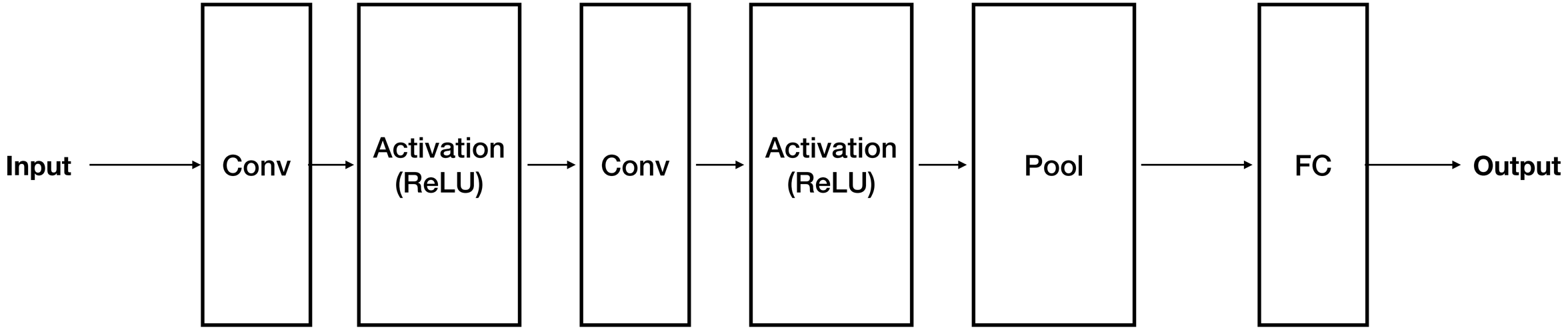

Convolutional Neural Networks

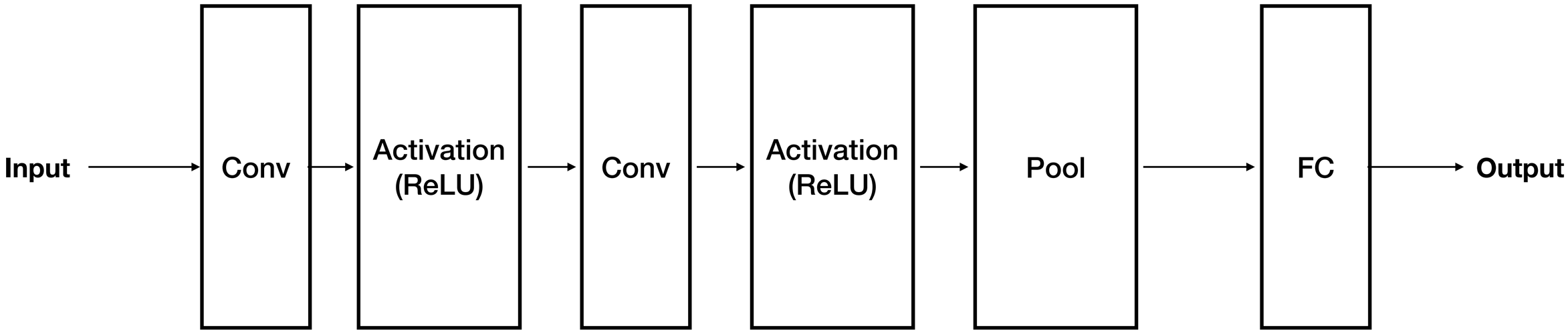

Convolutional Neural Networks

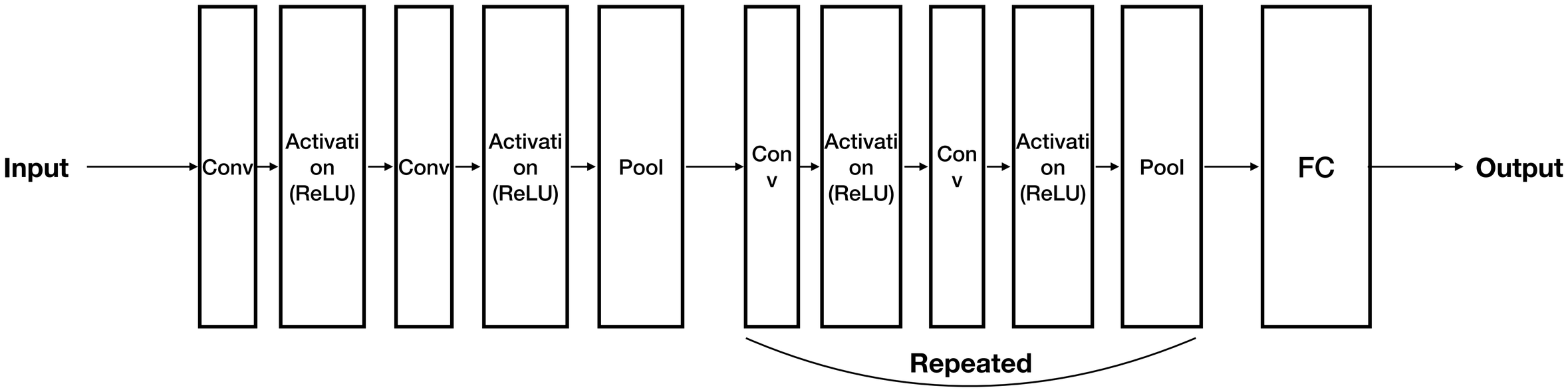

AlexNet (2012)

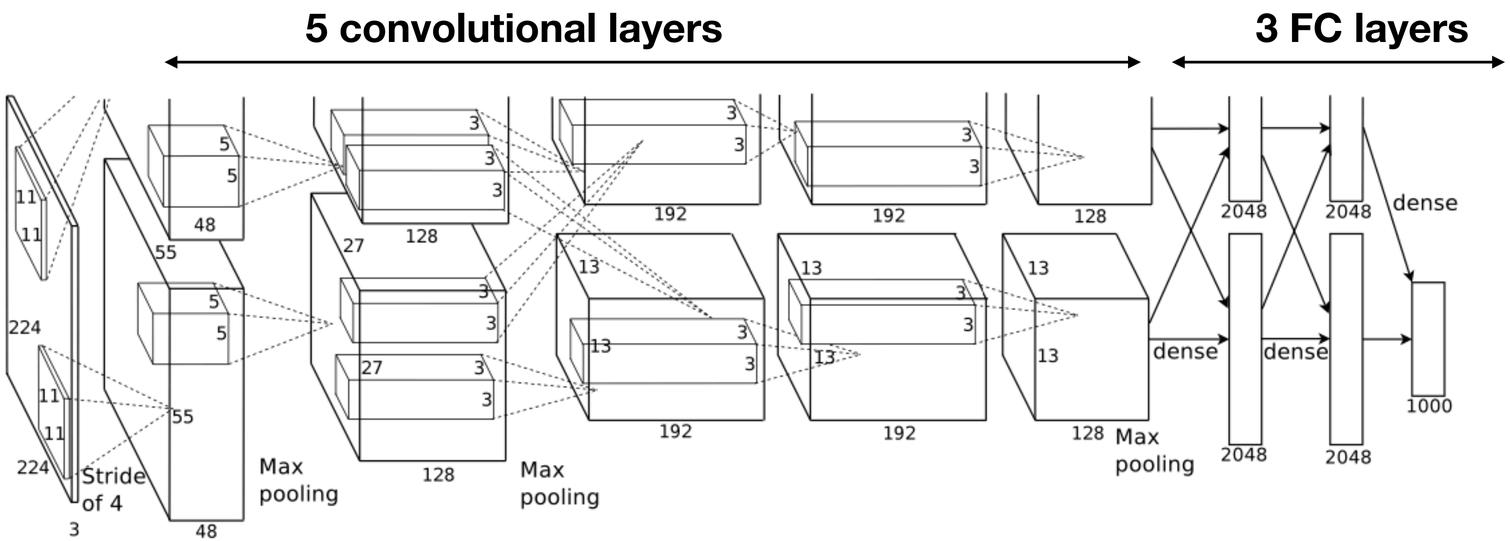

Figure 2: An illustration of the architecture of our CNN, explicitly showing the delineation of responsibilities between the two GPUs. One GPU runs the layer-parts at the top of the figure while the other runs the layer-parts at the bottom. The GPUs communicate only at certain layers. The network's input is 150,528-dimensional, and the number of neurons in the network's remaining layers is given by 253,440–186,624–64,896–64,896–43,264–4096–4096–1000.

Max pooling
After each convolution

Krizhevsky et. al "ImageNet Classification with Deep Convolutional Neural Networks"

What is a convolution?

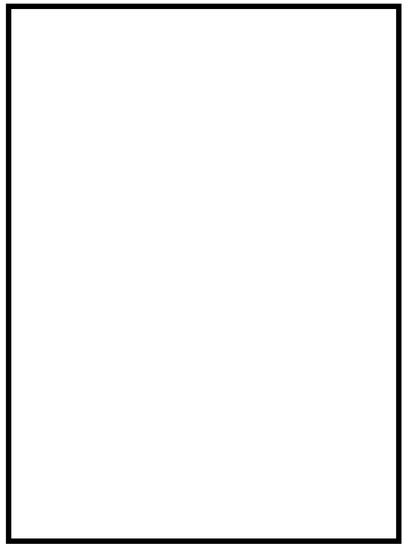

Input

W1	W2
W3	W4

Kernel / Filter

What is a convolution?

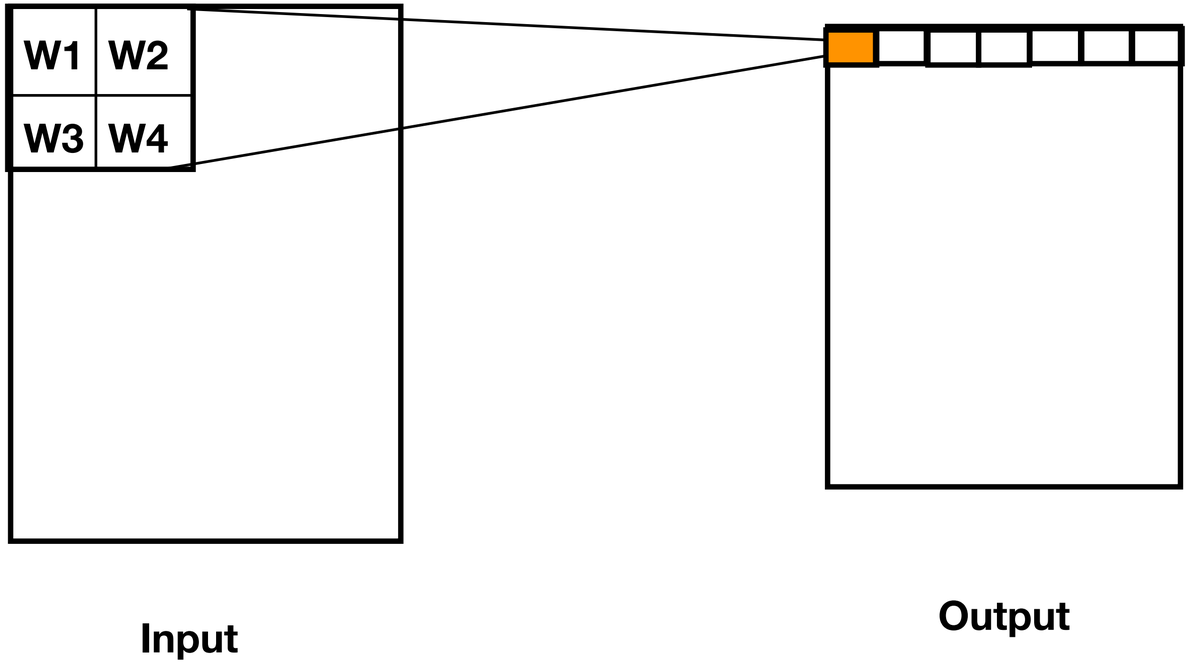

Weighted sum of input values $\sum W_i x_i$

What is a convolution?

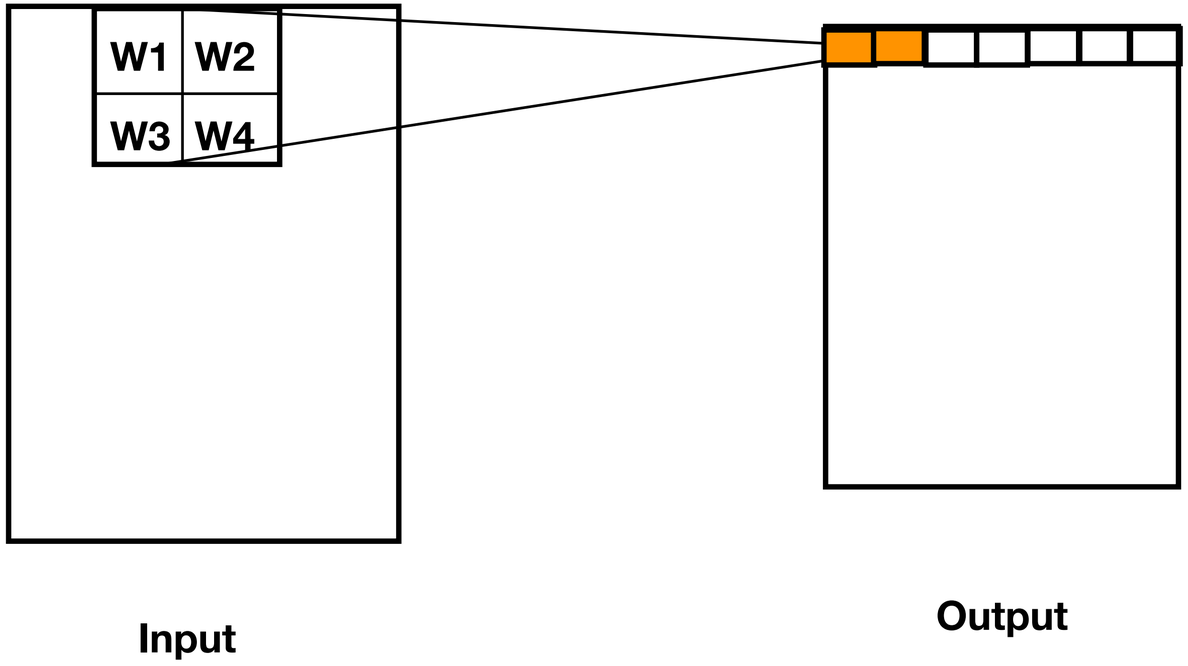

- 3D convolutions
- Depth-wise convolutions (grouped)
- Dilated Convolutions
- Padded Convolutions

Weighted sum of input values $\sum W_i x_i$

Recurrent Neural Networks

- Neural network topology with history

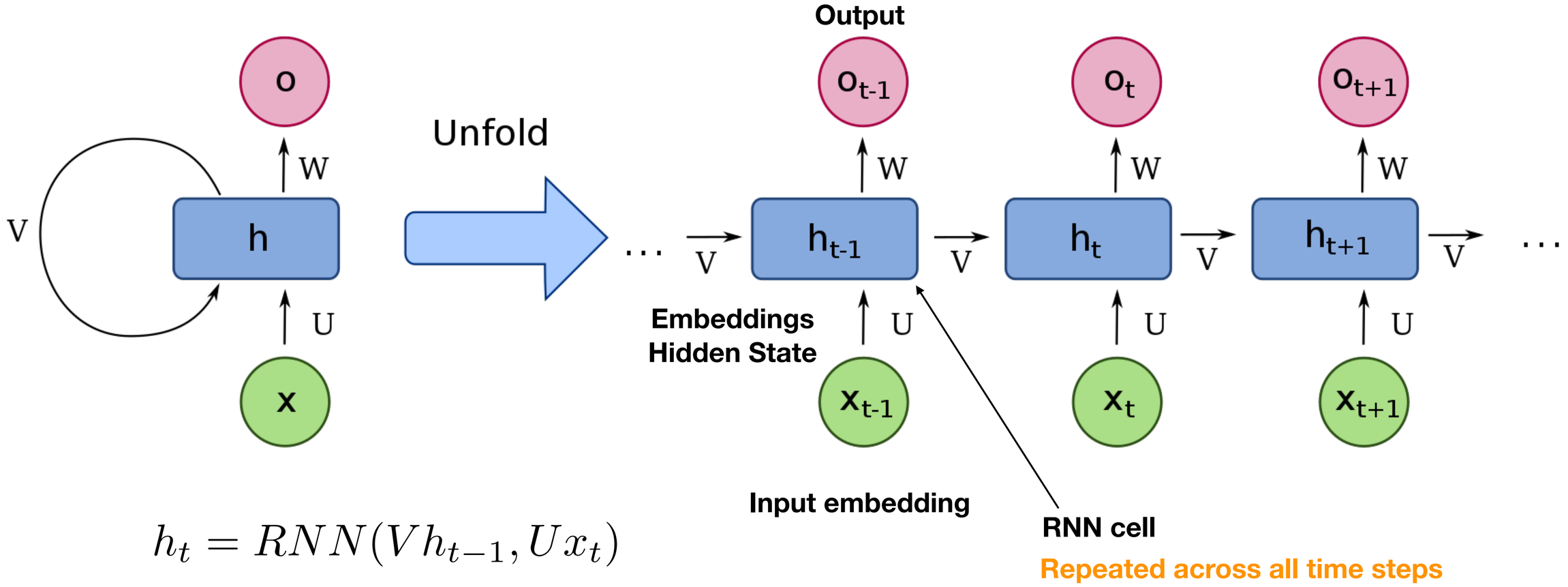

$$h_t = RNN(Vh_{t-1}, Ux_t)$$

Recurrent Neural Networks

- Main use case: when you need to remember across time steps
- Two main problems with training vanilla RNNs
  - Handling long term dependencies can be tricky
  - Vanishing or exploding gradients during training
- Two types of popular RNN cells that alleviate these problems
  - Long Short Term Memory cells and Gated Recurrent Units (https://colah.github.io/posts/2015-08-Understanding-LSTMs/)

Use case: Machine Translation

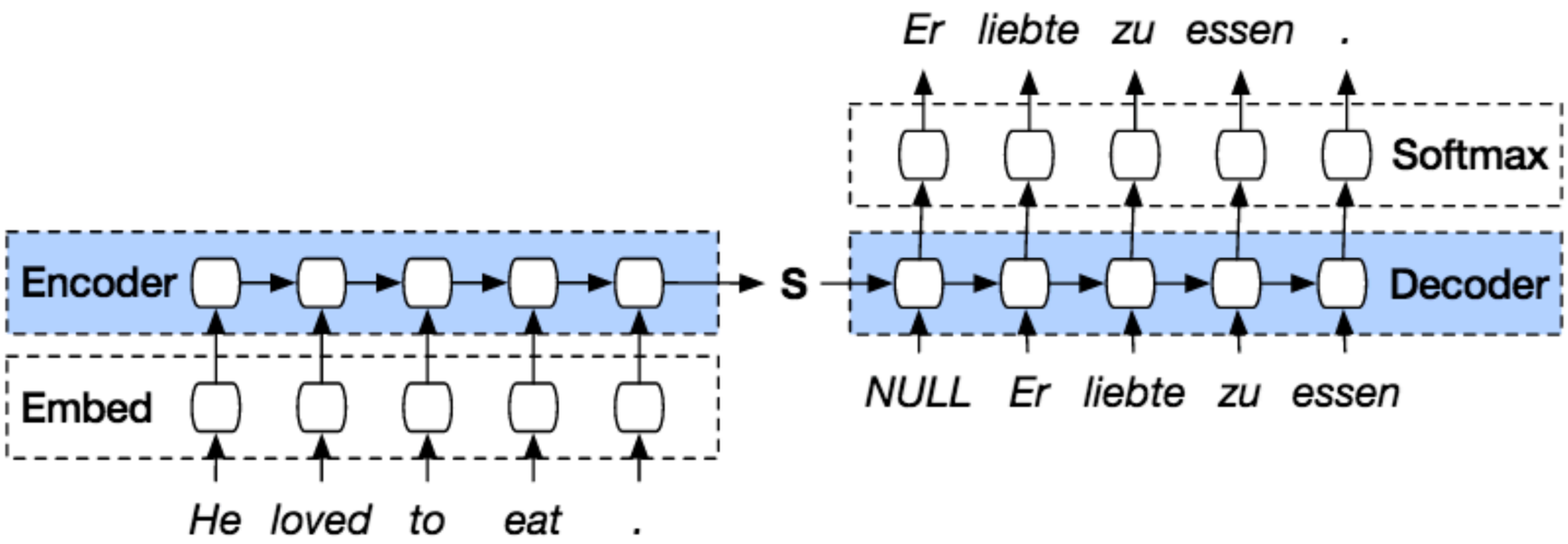

Sequence to Sequence Learning with Neural Networks

Graph Neural Networks

- Works on graph structured data
- Main goal is to find representations for nodes or edges (node or edge embeddings) that can be used for many downstream tasks

Embeddings

‘cat’	0.5	0.8	0.7	0.9	0.9
‘dog’	0.3	0.4	0.7	0.5	0.9

Word Embeddings

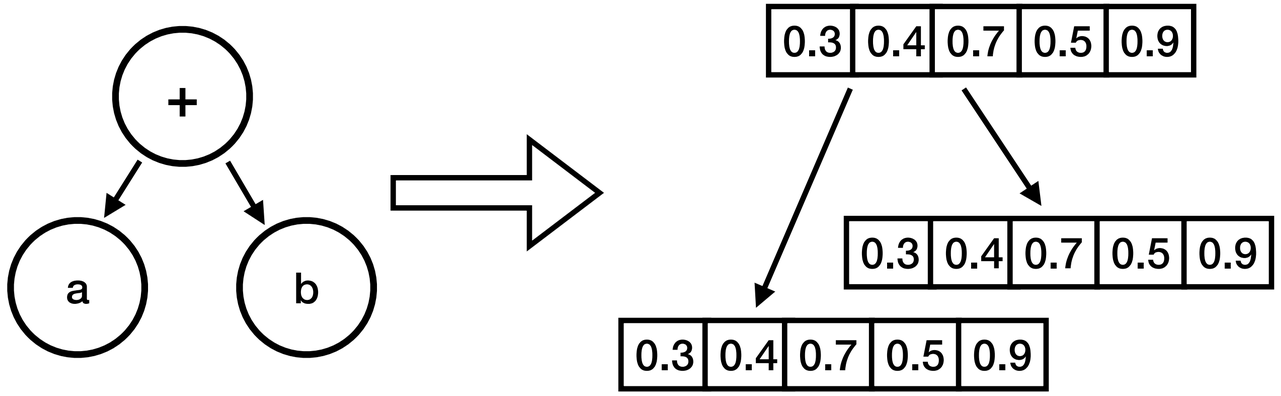

Node Embeddings

Graph Neural Networks

Find node embeddings for

- Protein folding
- Node clustering
- Variable inference

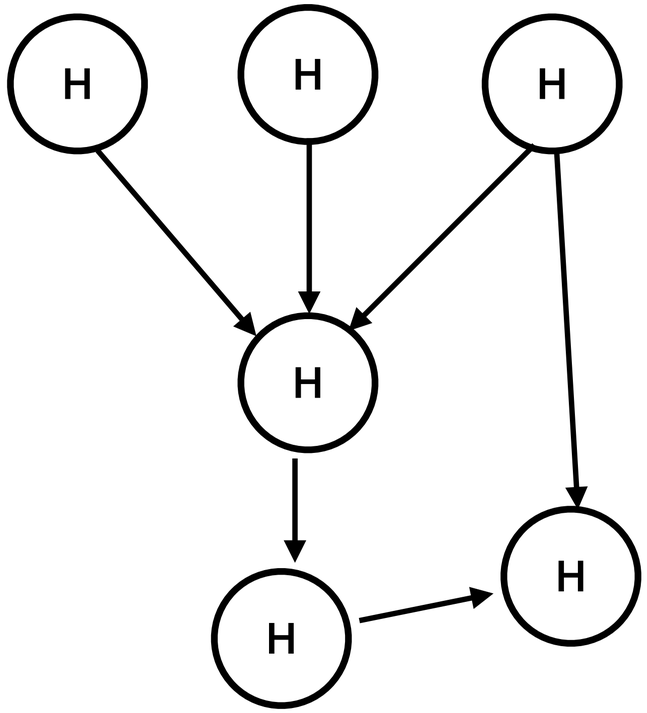

Protein Interface Prediction using Graph Convolutional Networks

Alex Fout†
Department of Computer Science
Colorado State University
Fort Collins, CO 80525
fout@colostate.edu

Jonathon Byrd†
Department of Computer Science
Colorado State University
Fort Collins, CO 80525
jonbyrd@colostate.edu

Basir Shariat†
Department of Computer Science
Colorado State University
Fort Collins, CO 80525
basir@cs.colostate.edu

Asa Ben-Hur
Department of Computer Science
Colorado State University
Fort Collins, CO 80525
asa@cs.colostate.edu

Spectral Clustering with Graph Neural Networks for Graph Pooling

Filippo Maria Bianchi *1 **Daniele Grattarola** *2 **Cesare Alippi** 2 3

Predicting drug–target binding affinity with graph neural networks

Thin Nguyen, Hang Le, Thomas P. Quinn, Thuc Le, Svetha Venkatesh

doi: https://doi.org/10.1101/684662

Computational Model

All nodes are updated at layer (L) from layer (L-1) values in parallel

Bulk Synchronous Parallel Style

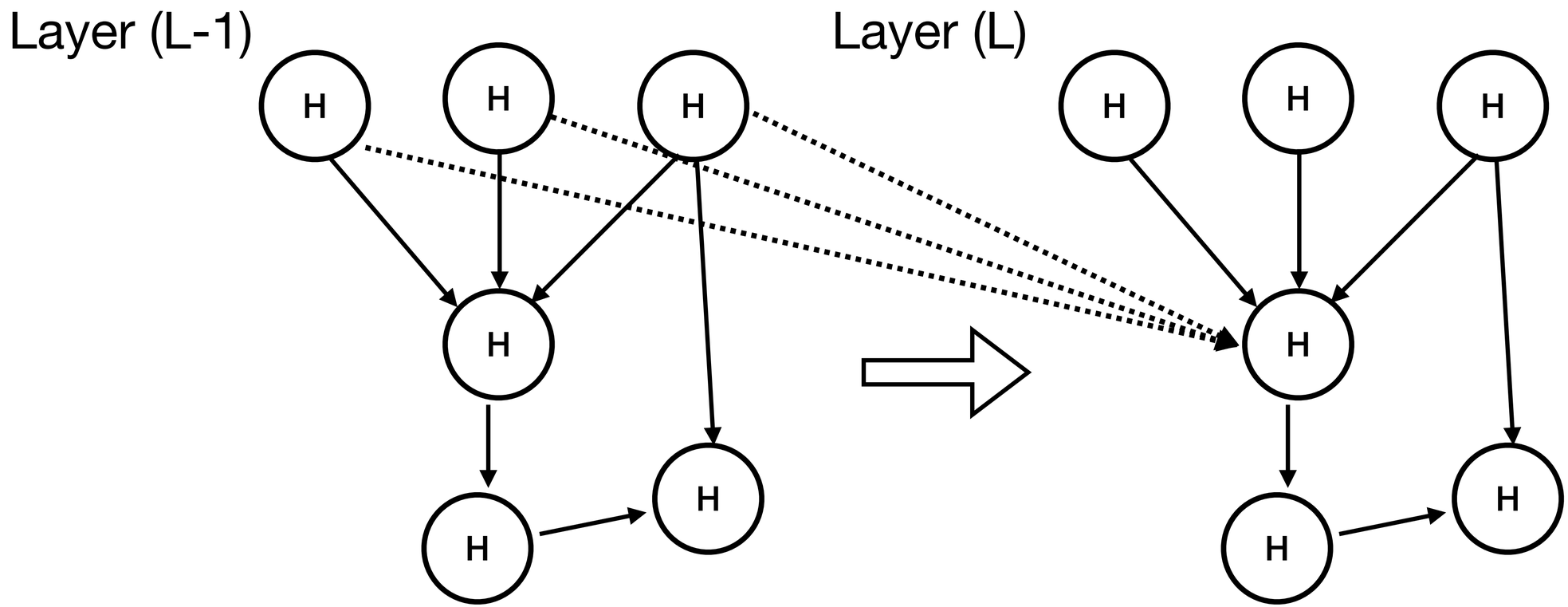

Computational Model

Bulk Synchronous Parallel Style

- All nodes are updated at layer (L) from layer (L-1) values in parallel
- Updates from a neighborhood of nodes (message passing)

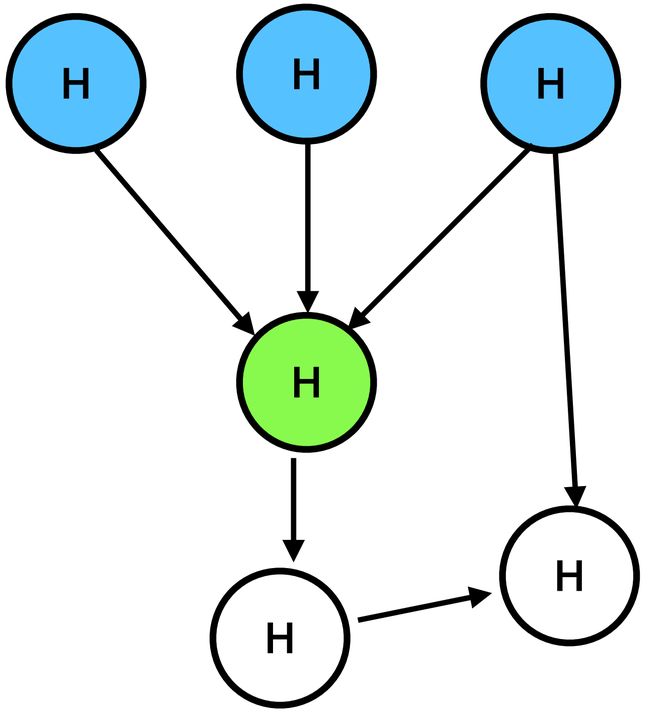

Computational Model

Bulk Synchronous Parallel Style

- All nodes are updated at layer (L) from layer (L-1) values in parallel
- Updates from a neighborhood of nodes (message passing)
- Barrier until all nodes are updated

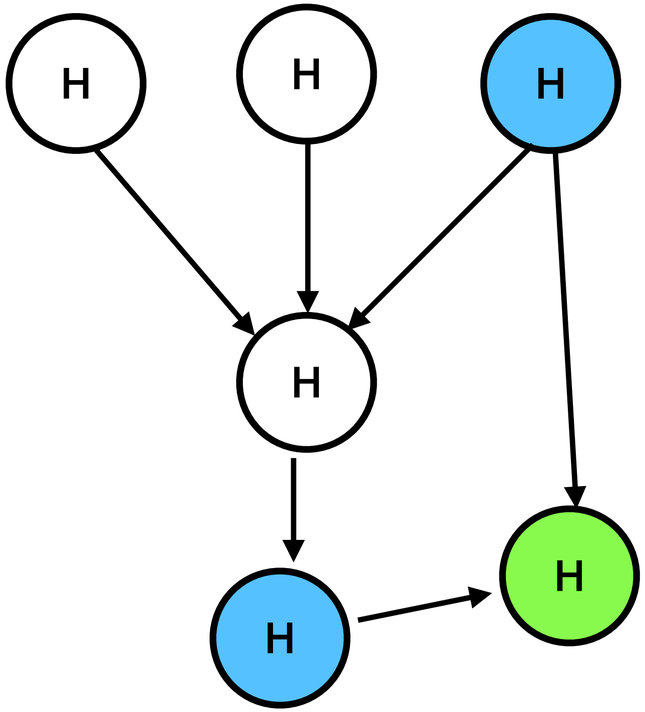

Neighborhood

Message

Aggregation

Update

Graph Convolutional Network (GCN)

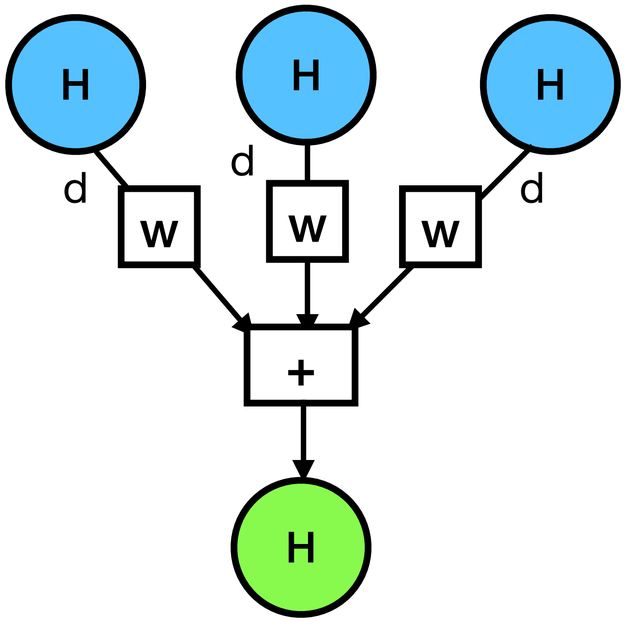

Suitable for Transductive Tasks

Neighborhood = All single-hop

Message Fixed importance $d = \frac{1}{\sqrt{d_{ii} d_{jj}}}$

Learnable Weights $W(l)$

$$d h_u^{(l)} \cdot W(l)$$

Aggregation Sum (fixed)

Update

$$h_v^{(l+1)} = \sigma \left(\sum_{u \in ne(v)} \frac{1}{\sqrt{d_{ii} d_{jj}}} h_u^{(l)} . W(l) \right)$$

Semi-Supervised Classification with Graph Convolutional Networks (ICLR 2017)

GraphSAGE

Generalization of GCN

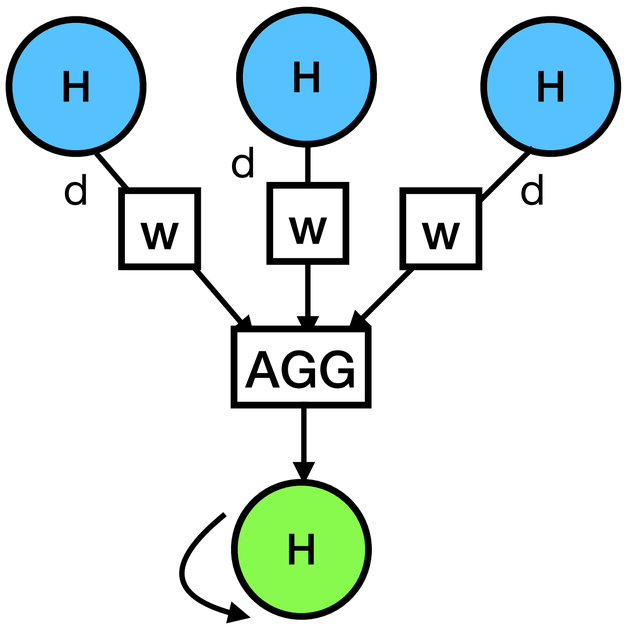

Suitable for Inductive Tasks

Neighborhood = All single-hop

Message Fixed importance $d = 1$

Learnable Weights $W(l)$

Subsample nodes

Aggregation +, pool, LSTM

Update (concatenate current node embedding)

$$h_v^{(l+1)} = \sigma\left(\left(h_v^{(l)} || \mathrm{AGG}(h_u^{(l)} | u \in N(v))\right).W^{(l)}\right)$$

Inductive Representation Learning on Large Graphs (NeurIPS 2017)

Transfomers Primer

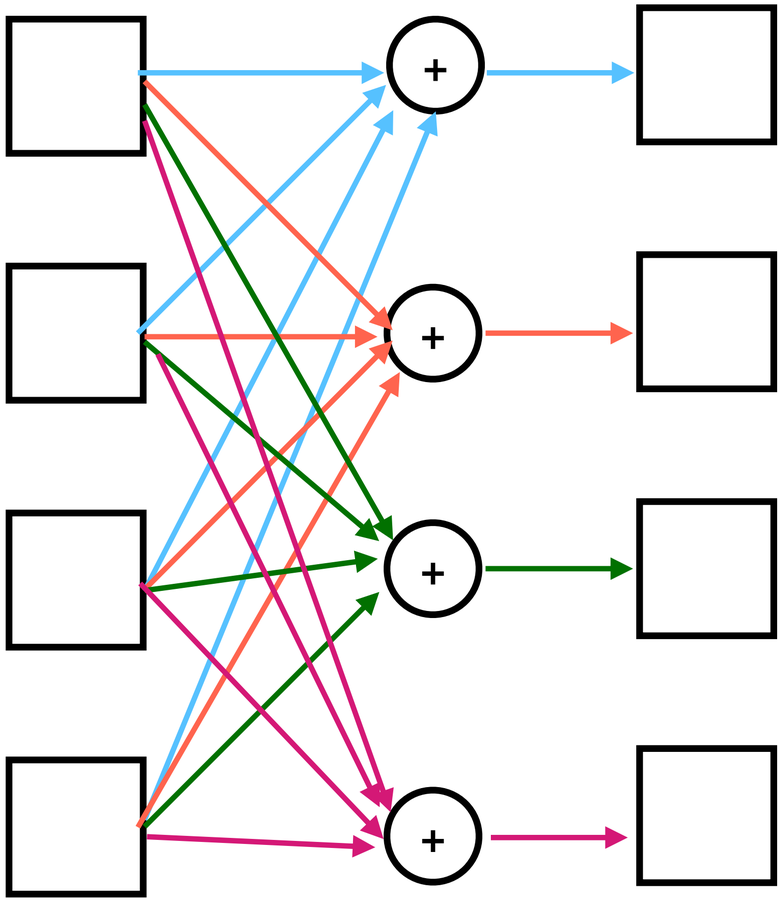

Easily parallelizable and can distribute work

Attention Is All You Need (NeurIPS 2017)

Next Lecture

- Genetic Algorithms
- Reinforcement Learning basics
- Auto-tuning and Design Space Exploration

Any Questions?